PATHFINDER

Technical Specification

Product Code: OV10150BKCWPIR **Luckinslive 407974988**

Description: 50W LED Floodlight With PIR IP65 CW Black

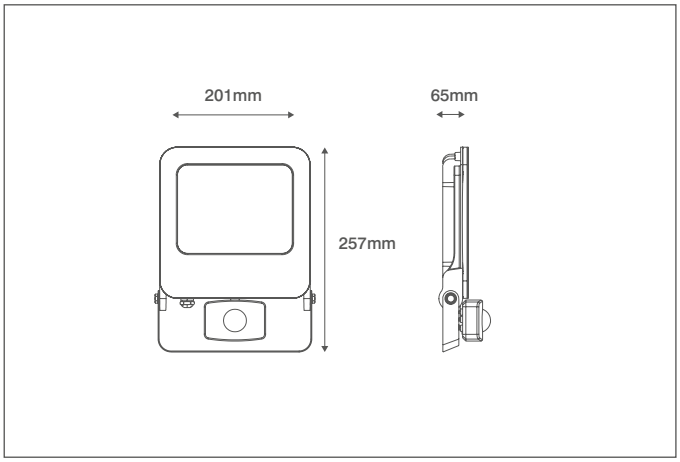

General Information

Dimensions (mm)	201 (W) x 65 (D) x 257 (H)
Materials	Body: Powder Coated Aluminium; Diffuser: Prismatic Glass
Colour	Black (RAL9004)
Product Weight (Kg)	1.04
Ingress Protection	IP65
Impact Rating (IK)	06
Warranty (Years)	3

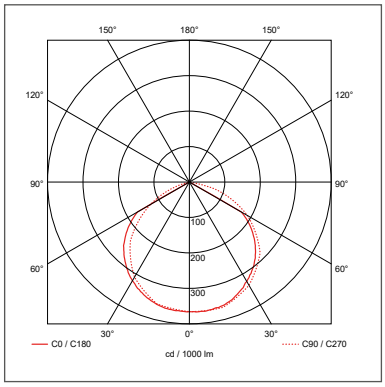

Supply & Power Information

Continuous Operating Voltage (AC) (Hz)	220-240 (50/60)
Safety Class	I
Circuit Wattage (W)	50
Input Current (mA)	225
Inrush Current/Time	0.352A (80µs)
Power Factor	0.9
Operating Temperature (°C)	-10 to +45
Critical Temperature (°C)	+70
Input Mains Cable	3 x 1mm^2 H05RN-F (1 Metre)

Luminaire Output

Colour Temperature (K)	4000
Colour Render Index (CRI)	>80
Typical Luminous Flux (lm)	4000
Efficacy (lm/W)	80
Beam Angle (°)	110
LED Lifetime (L70) (Hours)	30000

Sensor Information

Detection Distance (m)	10
Detection Angle (°)	180
Light Level Settings (Lux)	2 to 2000
Time Delay Settings	10 Secs to 10 Mins
Light Level Settings (Lux)	2 2000

Dimming Information

Dimmable	No

WARRANTY 3 YEARS IP65 PIR SENSOR

OVIA Limited, Scolmore House, Mariner, Lichfield Road Industrial Estate,
Tamworth, Staffordshire, B79 7UL United Kingdom
T: +44 (0)1827 300640
E: sales@oviaUK.com | **W:** oviaUK.com

Catalogue Section DoC Installation