E-SPRITE

Technical Specification

Product Code: OV6725CTA **Luckinslive 433365121**

Description: 25W 220mm Diameter LED Downlight With CCT Switch White

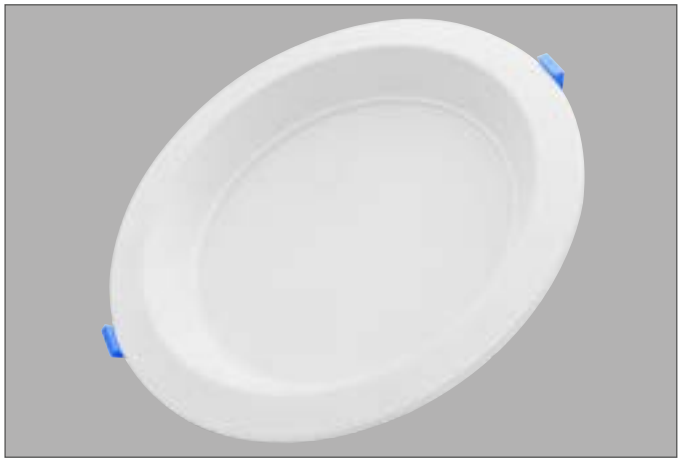

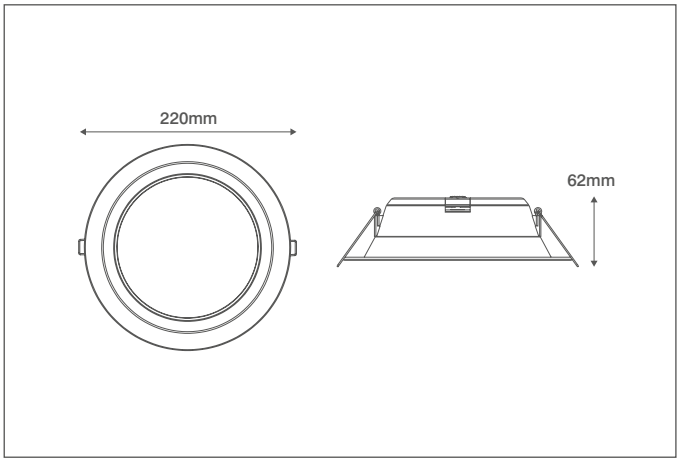

General Information

Dimensions (mm)	220 (Dia.) x 62 (D)
Materials	Bezel: Powder Coated Aluminium; Diffuser & Housing: Polycarbonate
Colour	White (RAL9003)
Product Weight (Kg)	0.32
Cutout Diameter (mm)	190
Recess Depth (mm)	57
Ingress Protection	IP20
Maximum Ceiling Thickness (mm)	40
Warranty (Years)	3

Supply & Power Information

Continuous Operating Voltage (AC) (Hz)	220-240 (50/60)
Safety Class	II
Circuit Wattage (W)	25
LED Wattage (W)	25
Input Current (mA)	250
Inrush Current	<60A (300uS@230V~)
Power Factor	>0.7
Driver Information	Remote Driver Supplied
Operating Temperature (°C)	-20 to +50
Maximum Critical Temperature (°C)	+85
Prewired Flow™ Connector	3 Pole CT105-F Push-fit Terminals

Luminaire Output

Colour Temperature (K)	3000	4000	6000
Typical Luminous Flux (lm)	2000	2500	2375
Efficacy (lm/W)	80	100	95
Beam Angle (°)		100	
Colour Rendering Index (CRI)	>80		
LED Lifetime (L70) (Hours)	30000		

Dimming Information

Dimmable	No

Compatible Accessories

OVCGMF0003 - 240V~ 12.7-33.7W 3 in 1 Multi-function Dimmable Constant Current LED Driver

OEP4 - 3 Hour Emergency Pack

OEP4ST - 3 Hour Self-Test Emergency Pack

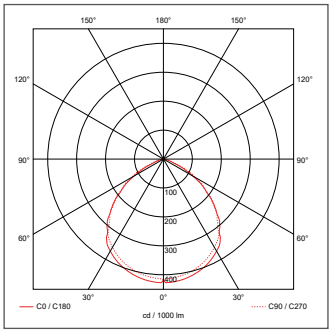

CCT WARRANTY 3 Years IP20 Pre-wired flow™ Connector

OVIA Limited, Scolmore House, Mariner, Lichfield Road Industrial Estate, Tamworth, Staffordshire, B79 7UL United Kingdom
T: +44 (0)1827 300640
E: sales@oviaUK.com | **W:** oviaUK.com

Catalogue Section DoC Installation