INCEPTOR® U-LITE

Technical Specification

Product Code: OV81181EMSD **Luckinslive 434775765**

Description: 34W 1800mm Linear LED Utility Luminaire With Self-Test Emergency & Switch Dim CCT IP65

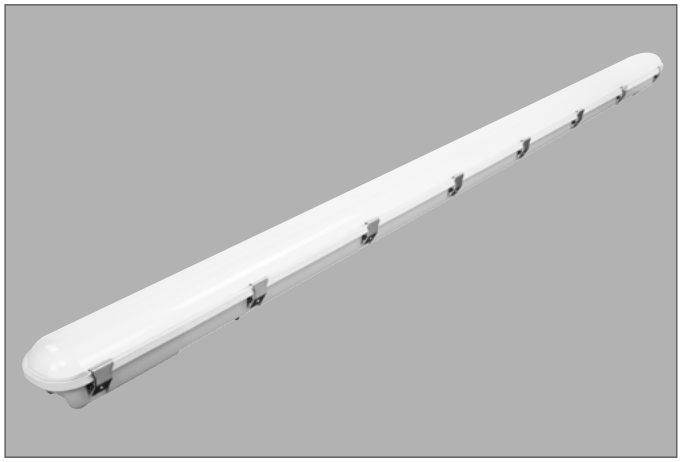

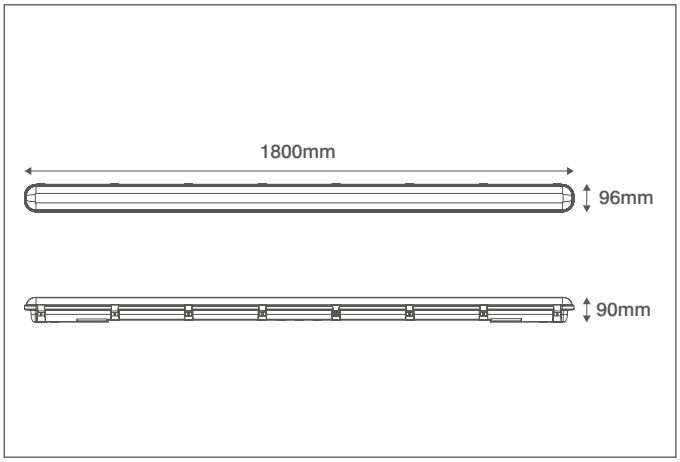

General Information

Dimensions (mm)	1800 (L) x 96 (W) x 90 (D)
Materials	Base: Polycarbonate Frosted Diffuser: Polycarbonate Diffuser Fixing Clips: 304 Grade Stainless Steel
Base Finish	Light Grey
Product Weight (Kg)	2.45
Ingress Protection	IP65
Impact Rating (IK)	08
Mounting	Ceiling, Wall or Suspended
Fixing Components Supplied	Surface and Suspension Brackets
Warranty (Years)	5
Battery Warranty (Years)	4
On Site Warranty	1 Year Unregistered, 2 Year Registered (https://oviauk.com/on_site_warranty)

Supply & Power Information

Continuous Operating Voltage (AC) (Hz)	220-240 (50/60)
Safety Class	I
Circuit Wattage (W)	36
LED Wattage (W)	34
Input Current (mA)	180
Inrush Current	30A (350µs)
Power Factor	>0.9
Operating Temperature (°C)	0 to +40
Maximum Critical Temperature (°C)	+95
Input Terminations	4 Pole Push Fit Terminals
Cable Input Accessories	20mm IP68 Nylon Gland Supplied

Luminaire Output

Colour Temperature (K)	4000	5000	6500
Typical Luminous Flux (lm)	4080	4250	4080
Efficacy (lm/W)	113	118	113
Beam Angle (°)		120	
Colour Rendering Index (CRI)	>80		
Flicker Free	Yes		
LED Lifetime (L70) (Hours)	50000		

Dimming Information

Dimmable	Yes
Dimming Format	Switch Dim
Dimming Input Termination	1 Terminal (Output to retractive switch supplied by driver)
Switch Dim Voltage	See driver for information
Switch Dim Control Format	See driver for information

Emergency Backup Information

Self-Test Facility	Yes
Emergency Luminous Flux (lm)	450
Battery Specification	6.4V 3000mAh LiFePo4
Minimum Duration (Hours)	3
Battery Warranty (Years)	4

Compatible Accessories

OVEMB6430LIS - 6.4V 3000mAh LiFePo4 Battery - Serial

Additional Information

Switch Dim dimmable driver

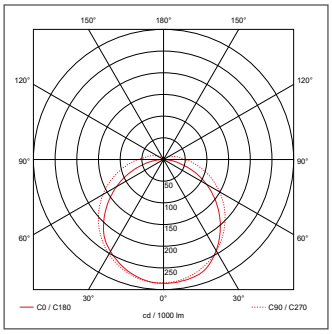

OVIA Limited, Scolmore House, Mariner, Lichfield Road Industrial Estate, Tamworth, Staffordshire, B79 7UL United Kingdom
T: +44 (0)1827 300640
E: sales@oviaUK.com | **W:** oviaUK.com

Catalogue Section DoC Installation