EVO

Technical Specification

Product Code: OV9300BK16MWEMST **Luckinslive 433365066**

Description: 16W LED Bulkhead With Knockouts Microwave Sensor & Self-Test Emergency IP65 CCT Black

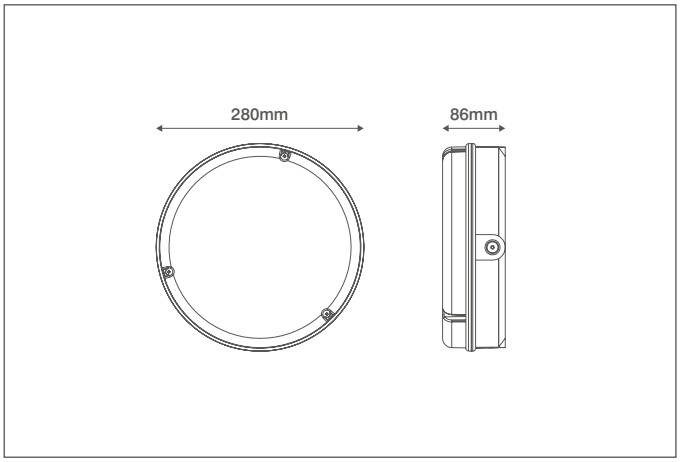

General Information

Dimensions (mm)	280 (Dia.) x 86 (D)
Materials	Base & Diffuser: Polycarbonate (UV Stabilised); LED Array: Aluminium Substrate
Colour	Black (RAL9004)
Product Weight (Kg)	0.97
Ingress Protection	IP65
Impact Rating (IK)	08
Flammability Rating	UL94-V2
Mounting	Ceiling or Wall
Warranty (Years)	5

Supply & Power Information

Continuous Operating Voltage (AC) (Hz)	220-240 (50/60)
Safety Class	II
Circuit Wattage (W)	18
LED Wattage (W)	16
Input Current (mA)	160
Power Factor	>0.9
Driver Information	Integrated
Operating Temperature (°C)	0 to +50
Maximum Critical Temperature (°C)	+80
Input Terminations	4 Pole Push-fit Terminals

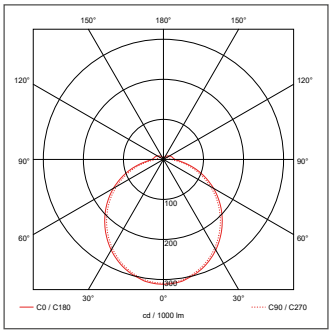

Luminaire Output

Colour Temperature (K)	3000	4000	6000
Typical Luminous Flux (lm)	1500	1650	1550
Efficacy (lm/W)	83	91	86
Beam Angle (°)		114	
Corridor Luminous Flux (15%)	150	165	155
Corridor Luminous Flux (25%)	375	412	387
Colour Rendering Index (CRI)	>80		
LED Lifetime (L70) (Hours)	30000		

Dimming Information

Dimmable	Yes
Dimming Format	Corridor Function
Corridor Dimming Levels (%)	10 or 25

Sensor Information

Detection Area Settings (%)	50 or 100
Dimming Levels - Corridor Function (%)	10 or 30
Detection Angle (°)	≤150
Light Level Settings (Lux)	15 / Disable
HF System	5.8GHz ±75MHz
Master/Slave Facility	Not Available

Emergency Backup Information

Self-Test Facility	Yes
Emergency Luminous Flux (lm)	122
Battery Specification	Li-Ion 2000mAh 3.7V
Minimum Duration (Hours)	3
Battery Warranty (Years)	4

Additional Information

Comes with 4 x 20mm Knockouts (sides), & 1 x 25mm (base)

CCT · 5 Year Warranty · 4 Year Battery Warranty · Self Test Available · IP65 · Microwave Sensor

OVIA Limited, Scolmore House, Mariner, Lichfield Road Industrial Estate, Tamworth, Staffordshire, B79 7UL United Kingdom
T: +44 (0)1827 300640
E: sales@oviaUK.com | **W:** oviaUK.com

Catalogue Section DoC Installation