ACCESSORIES

Technical Specification

Product Code: OVSUSP733 **Luckinslive 407974810**

Description: Suspension Kit For 1200mm Long Panel Lights

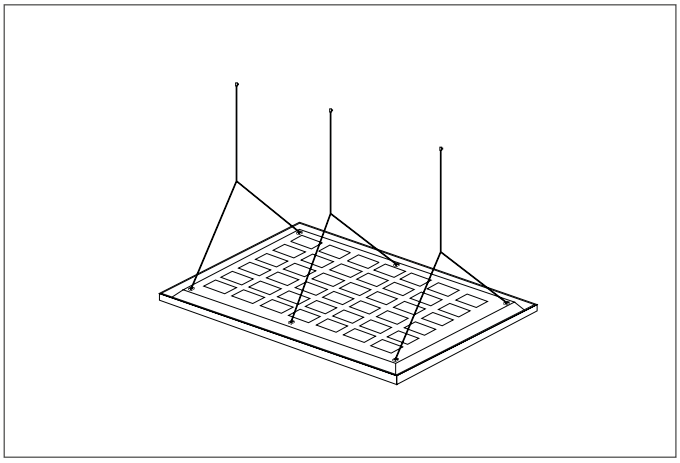

General Information

Dimensions (mm)	1400 Drop Maximum
Materials	Fixings: Chrome Plated Steel; Wire: Stranded Steel
Product Weight (Kg)	0.24
Warranty (Years)	5

Additional Information

3 point fixing and suspension

Compatible Fittings

1200mm x 300mm & 1200mm x 600mm LED Panels

WARRANTY 5 YEARS

OVIA Limited, Scolmore House, Mariner, Lichfield Road Industrial Estate,
Tamworth, Staffordshire, B79 7UL United Kingdom
T: +44 (0)1827 300640
E: sales@oviaUK.com | **W:** oviaUK.com

Catalogue Section DoC Installation